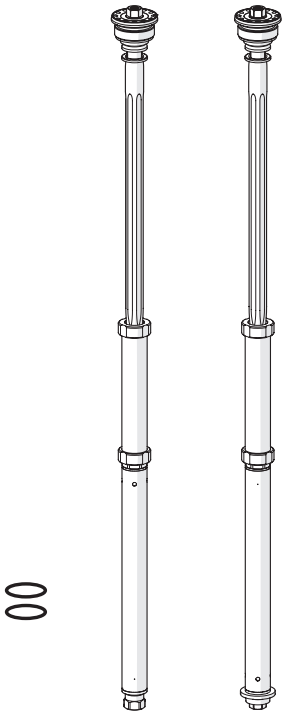

Kit Contents		
Description	**Part No**	**Pcs**
Front fork kit	21944-01	1
O-ring	00438-85	2
Öhlins sticker (60x23) wh	00191-32	2
Öhlins sticker (60x23) blue	00191-33	2
Owner's manual	07289-01	1

Note!

Please note that there can be small differences between your product and the images in these instructions.

Note!

Please note that during storage and transport, especially at high ambient temperature, some of the oil and grease used for assembly may leak and stain the packaging. This will not cause damage to the product, wipe off the excessive oil or grease with a cloth.

⚠ Warning!

This kit should only be installed by an authorized Öhlins dealer. The installation procedure requires certain tools.

Note!

Before you install this product, check the kit contents. If anything is missing, please contact an Öhlins dealer.

⚠ Warning!

Before you install this product, read the Öhlins Owner's manual and this document. This product is an important part of the vehicle and the vehicle stability.

Front Fork Kit for Yamaha YZF-R3

21944-01

Mounting Instructions

ÖHLINS®
ADVANCED SUSPENSION TECHNOLOGY

MOUNTING INSTRUCTIONS

⚠ Warning!

We strongly recommend to let an Öhlins dealer install this product.

⚠ Warning!

If you work with a lifted vehicle, make sure that it is safely supported to prevent it from tipping over.

Note!

When you work with this product, see the vehicle service manual for vehicle specific procedures and important data.

Note!

Before you install this product clean the vehicle.

⚠ Warning!

Spring compression creates a potential danger because of the violent force that loaded springs are capable of. Beware of this when you work with the front fork.

TOOLS, GREASE AND FLUID

Tools needed for the original front fork

- Refer to the vehicle service manual for tools needed for removing/installing the front fork from the vehicle.
- Refer to the vehicle service manual for tools needed for removing the cartridge from the front fork.

Tools needed for the Öhlins cartridge kit

Tool	Part no	Applies	Size
Vehicle service manual			
Torque wrench			
Heat gun		Soften thread locker	
Wrench		Shaft extension	15 mm
Hex key		Compression and rebound bleed adjusters	3 mm
Socket		Preload adjuster	14 mm
Ruler		Oil level	
Öhlins tool	01765-08	Shaft extension	
Top cap tool	00797-08	Top cap	
Clamp tool	24670-01	24669-04	
Sleeve	24669-04	Original inner tube	37 mm
Öhlins tool	01797-08	Seal head	
Suspension fluid	01309-xx		
Grease	00146-01		100 g
Loctite 2400	01791-25		50 ml
Loctite 2700	01791-27		50 ml

1 Remove the original front fork

Note!

The following procedure applies to both front fork legs.

1.1

Put the motorcycle on a workstand so that the front wheel barely touches the ground.

⚠ Warning!

Make sure the vehicle is securely supported so that it will not fall over.

1.2

Remove front fender, brake calipers, speed sensor (if present) and front wheel.

1.3

Release main spring preload fully (if present).

1.4

Note front fork leg position.

1.5

Loosen upper triple clamp.

1.6

Loosen (do not remove) top cap ½ turn.

1.7

Loosen lower triple clamp.

1.8

Remove front fork legs from triple clamps.

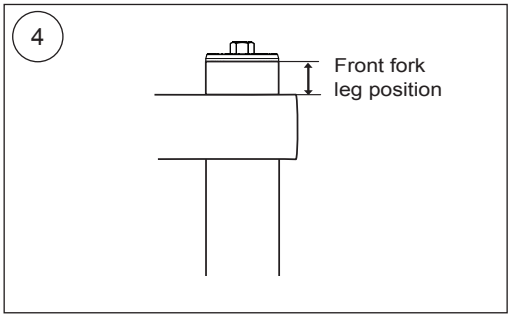

2 Left hand side front fork leg

Remove original

2.1

Loosen top cap from outer tube.

2.2

Slide outer tube down until it stops.

2.3

Loosen and remove top cap from shaft according to vehicle service manual.

2.4

Remove main spring and surrounding parts from front fork leg.

2.5

Drain front fork leg of suspension fluid.

2.6

Loosen cartridge according to vehicle service manual.

2.7

Remove cartridge from front fork leg.

Install the Öhlins compression cartridge kit

Caution!

The cartridge kit is divided into compression and rebound cartridges.
Install compression cartridge marked "COMP" in left hand side front fork leg.

2.8

Remove top cap (A), spring support (B) and preload tube (C).

2.9

Insert the cartridge in the front fork leg.

2.10

Install bottom screw according to instructions in the vehicle service manual.

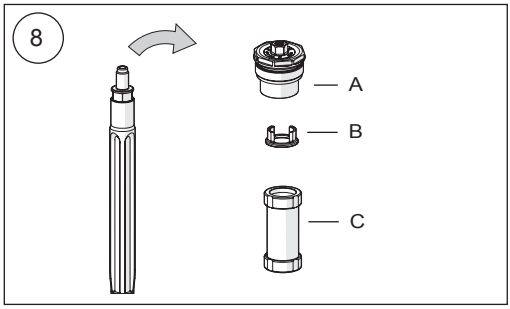

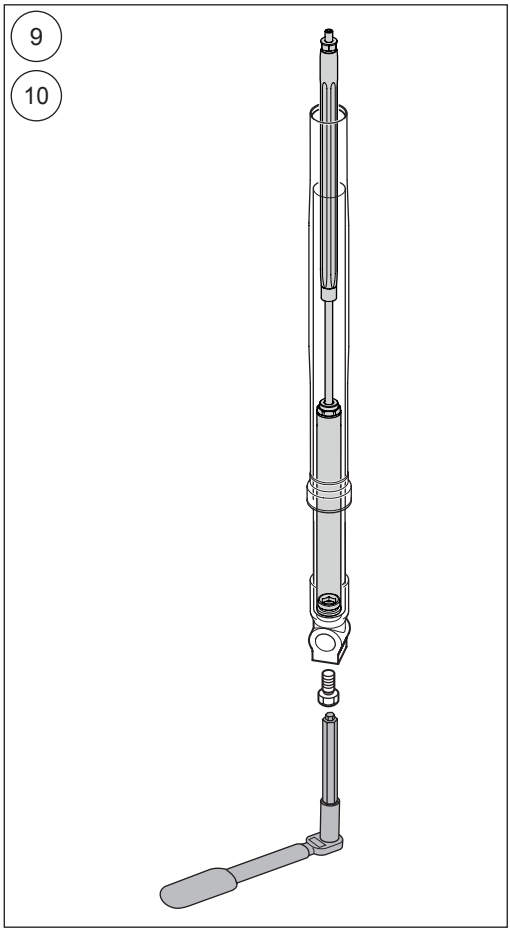

2.11

Pour approximately 0.5 litre Öhlins suspension fluid in front fork leg.
[01309-xx suspension fluid]

2.12

Use a hex key to open compression bleed adjuster fully. Install top cap directly to shaft extension (no main spring or preload tube). Pull up outer tube and tighten it to the top cap with your hand.
[Hex key 3 mm]

2.13

Pull outer tube up and down 10-15 times to pump out all air from the cartridge.

2.14

Remove top cap from front fork leg.

2.15

Make sure that shaft assembly and outer tube are in their bottom positions.
Set suspension fluid level according to chapter “Setup Data”.

2.16

Install shaft extension tool on top of shaft extension.
Install preload tube (A), main spring (B) and spring support (C) over shaft extension tool.
[**01765-08 shaft extension tool**]

2.17

Pull up shaft assembly and grab spring support with a wrench tool.
[**Wrench 15 mm**]

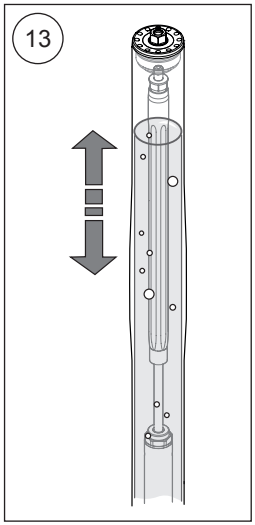

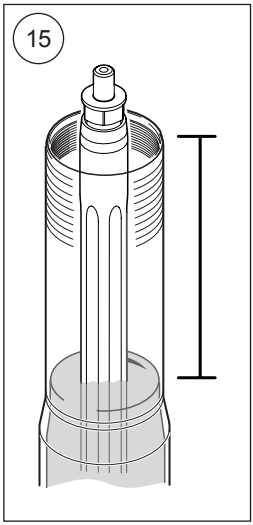

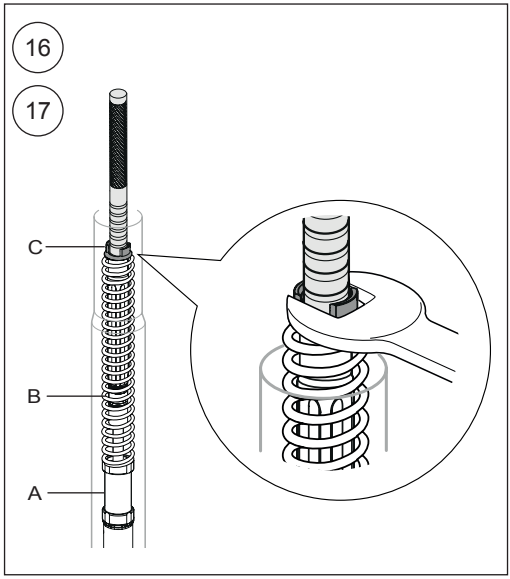

2.18

Install o-ring on top cap. Apply grease on o-ring and thread.
[**00438-85 o-ring**]
[**00146-01 grease**]

2.19

Apply grease on preload socket contact surfaces.
[**00146-01 grease**]

2.20

Make sure that compression adjuster is fully open before installing top cap.
Use a hex key to open compression adjuster.
Remove pull-up tool and install top cap to the shaft extension. Tighten to 12 Nm.
[**Hex key 3 mm**]
[**Socket 14 mm**]

2.21

Remove wrench from spring support.
[**Wrench 15 mm**]

2.22

Pull up outer tube. Make sure front fork leg is in a fully extended position. Tighten top cap to outer tube. Tighten to 10 Nm.
[**00797-08 top cap tool**]

2.23

Set main spring preload and compression adjusters according to chapter “Setup Data”.
Use a hex key for compression adjuster.
Use a socket for the preload adjuster.
[**Hex key 3 mm**]
[**Socket 14 mm**]

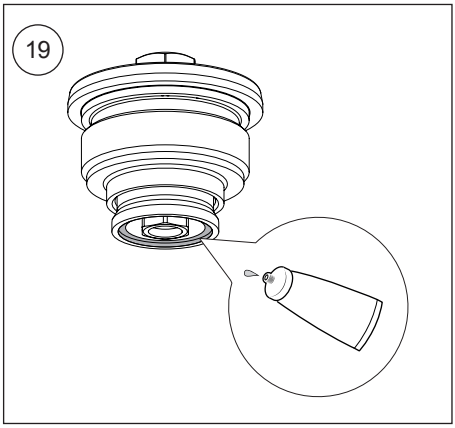

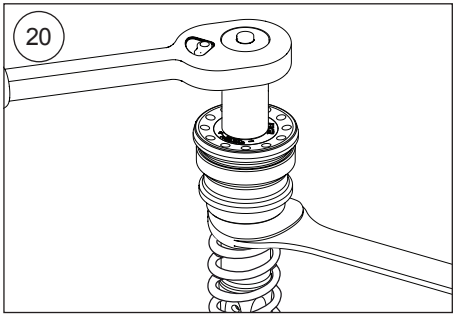

3 Right hand side front fork leg

Remove original

3.1

Loosen top cap from outer tube and shaft.

3.2

Slide outer tube down until it stops.

3.3

Remove seal head from inner tube according to instructions in the vehicle service manual.

3.4

Remove main spring and associated parts according to instructions in the vehicle service manual.

3.5

Drain front fork leg of suspension fluid.

3.6

Remove outer tube from inner tube according to instructions in the vehicle service manual.

3.7

Remove inner tube lock screw.

⚠ Warning!

If the lock screw is not removed, the inner tube and front fork bottom will be damaged.

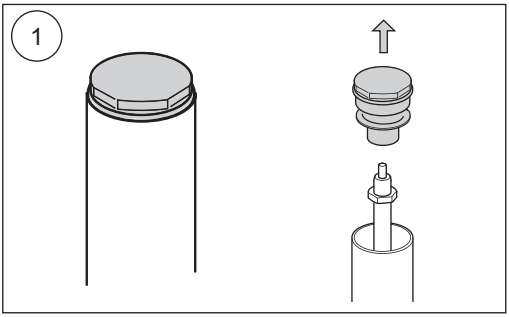

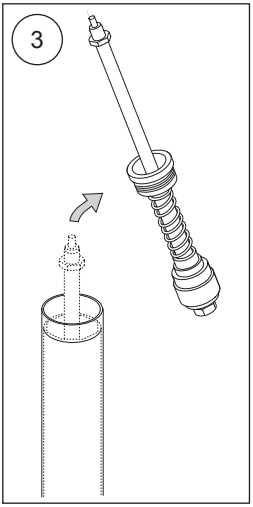

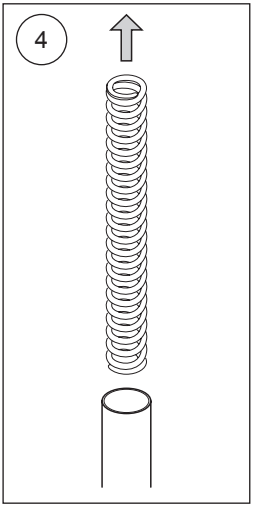

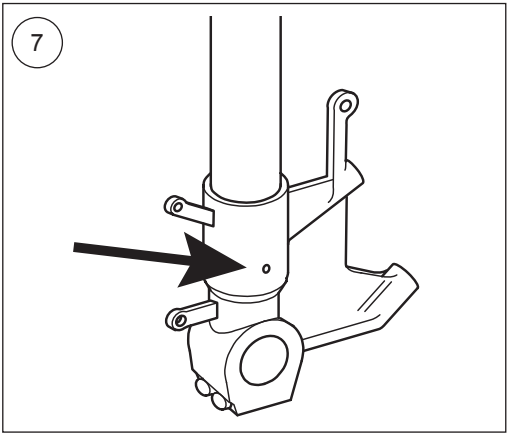

⚠ Warning!

The inner tube thread must be repaired before removing the inner tube.

3.8

Install inner tube tool on inner tube. Do not place the tool at sealing or gliding surface.

[24670-01 Clamp tool]

[24669-04 Sleeve 37]

3.9

Soften thread locker between inner tube and front fork bottom using a heat gun.

[**Heat gun**]

3.10

Remove inner tube from front fork bottom.

3.11

Remove and replace o-ring if worn or damaged. Part no according to the vehicle spare part list.

3.12

Remove washer.

Install the Öhlins rebound cartridge kit

Caution!

The cartridge kit is divided into compression and rebound cartridges.
Install rebound cartridge marked “REB” in right hand side front fork leg.

3.13

Remove the adaptor ring from the cartridge.

3.14

Install adaptor ring in front fork bottom.

Note!

Check the position and rotation of adaptor ring.

3.15

Install o-ring in front fork bottom.

[**00146-01 grease**]

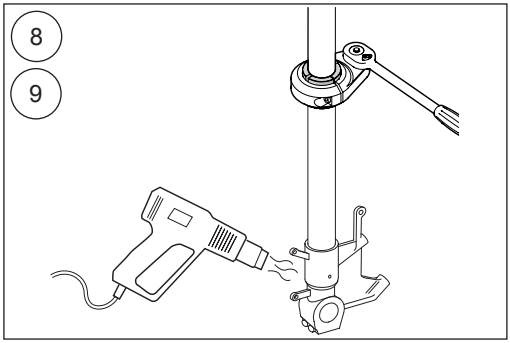

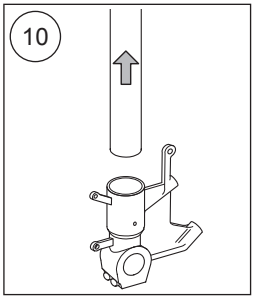

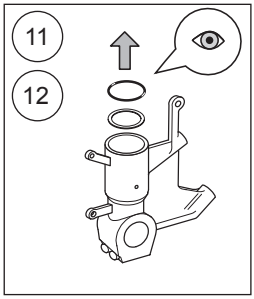

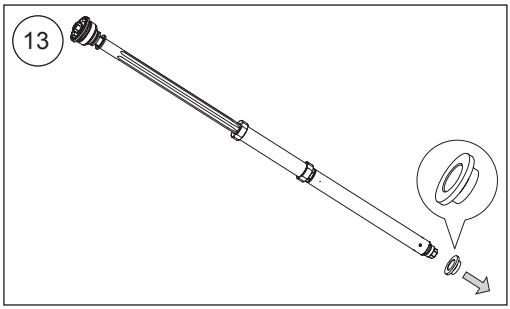

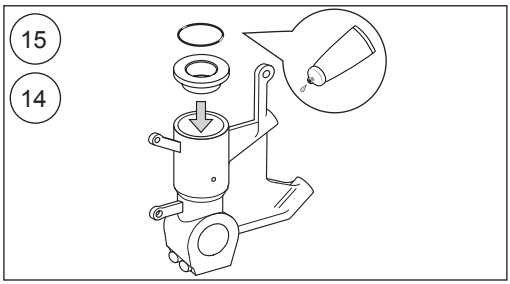

3.16

Install inner tube using inner tube tool.
Apply Loctite 2700. Tighten to 130 Nm.
[24670-01 Clamp tool]
[24669-04 Sleeve 37]
[**01791-27 Loctite 2700**]

Note!

To get the correct torque, make sure to place the torque wrench in a 90 degree angle to the Fork tube tool.

3.17

Remove top cap (A), spring support (B) and preload tube (C).

3.18

Apply Loctite 2400 on adaptor thread.
Install cartridge using seal head tool.
Tighten to 25 Nm.
[**01791-25 Loctite 2400**]
[**01797-08 seal head tool**]

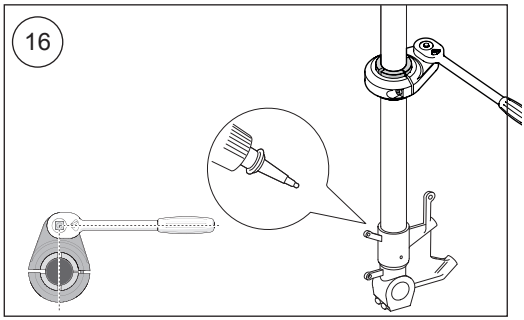

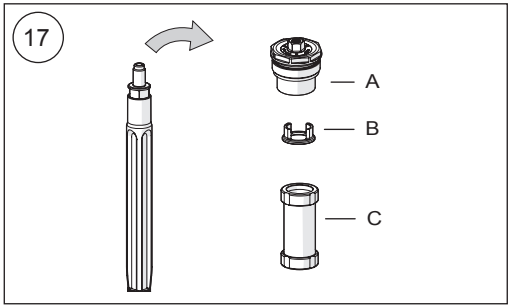

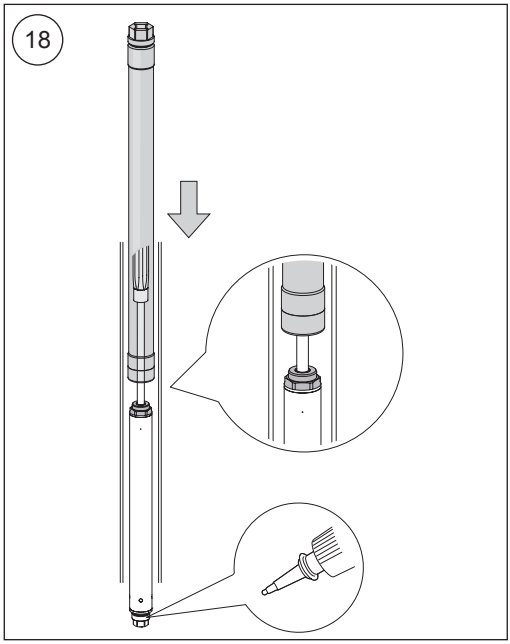

3.19

Pour approximately 0.5 litre Öhlins suspension fluid in front fork leg.
[01309-xx suspension fluid]

3.20

Use a hex key to open rebound bleed adjuster fully. Install top cap directly to shaft extension (no main spring or preload tube). Pull up outer tube and tighten it to the top cap with your hand.
[Hex key 3 mm]

3.21

Pull outer tube up and down 10-15 times to pump out all air from the cartridge.

3.22

Remove top cap from front fork leg.

3.23

Make sure that shaft assembly and outer tube are in their bottom positions.
Set suspension fluid level according to chapter “Setup Data”.

3.24

Install shaft extension tool on top of shaft extension.
Install preload tube (A), main spring (B) and spring support (C) over shaft extension tool.
[**01765-08 shaft extension tool**]

3.25

Pull up shaft assembly and grab spring support with a wrench.
[**Wrench 15 mm**]

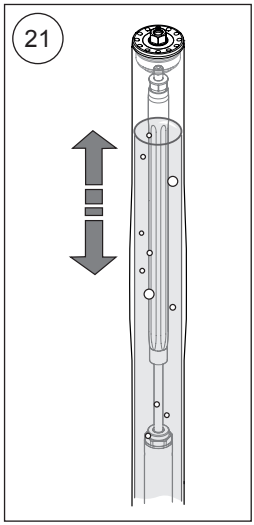

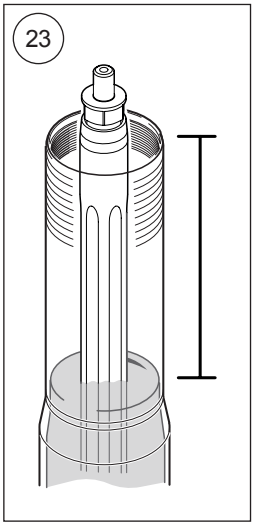

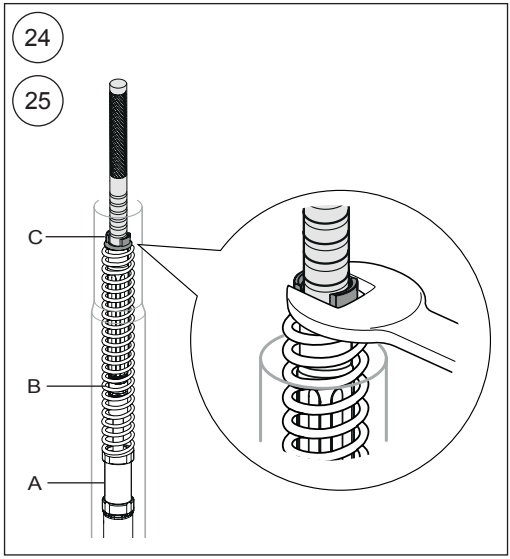

3.26

Install o-ring on top cap. Apply grease on o-ring and thread.
[**00438-85 o-ring**]
[**00146-01 grease**]

3.27

Apply grease on preload socket contact surfaces.
[**00146-01 grease**]

3.28

Make sure that rebound adjuster is fully open before installing top cap.
Use a hex key to open rebound adjuster.
Remove pull-up tool and install top cap to the shaft extension. Tighten to 12 Nm.
[**Hex key 3 mm**]
[**Socket 14 mm**]

3.29

Remove wrench from spring support.
[**Wrench 15 mm**]

3.30

Pull up outer tube. Make sure front fork leg is in a fully extended position. Tighten top cap to outer tube. Tighten to 10 Nm.
[**00797-08 top cap tool**]

3.31

Set main spring preload and rebound adjusters according to chapter “Setup Data”.
Use a hex key for compression adjuster.
Use a socket for the preload adjuster.
[**Hex key 3 mm**]
[**Socket 14 mm**]

4 Install the front fork in the vehicle

Note!

The following procedure applies to both front fork legs.

4.1

Install the front fork legs into the triple clamps at the position recommended in setup data (Front leg position). See the vehicle service manual for correct procedure and tightening torque.

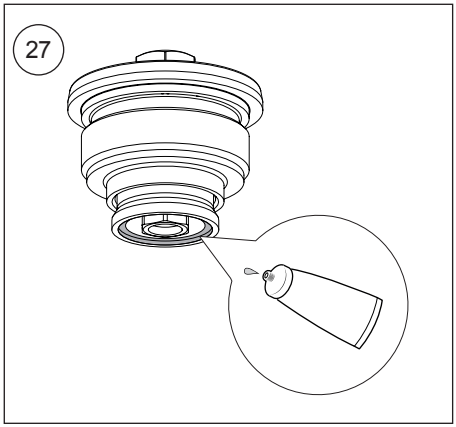

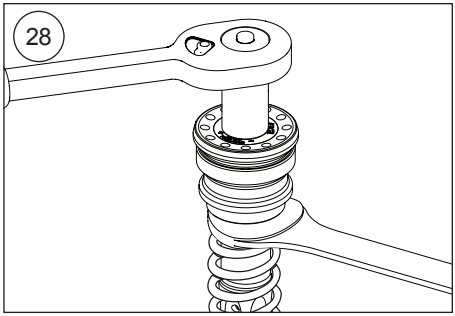

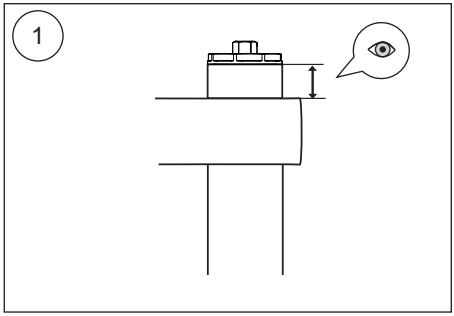

Note!

Measure the front fork leg position from the upper triple clamp to the top of the outer tube.

SETUP DATA

Compression	8	clicks
Rebound	12	clicks
Suspension fluid level	120	mm
Minimum suspension fluid level	300	mm
Suspension fluid	01309-xx	
Front leg position	Standard position	

MAIN SPRING RECOMMENDATION

Rider weight [kg]	50	60	70	80	90	100	110
Spring rate [N/mm]	6	6,5	6,5	7	7	7,5	7,5
Preload [turns]	10	8	10	8	10	8	10
Part number (pair)	08428-60	08428-65	08428-65	08428-70	08428-70	08428-75	08428-75

Spring are packed in pairs.

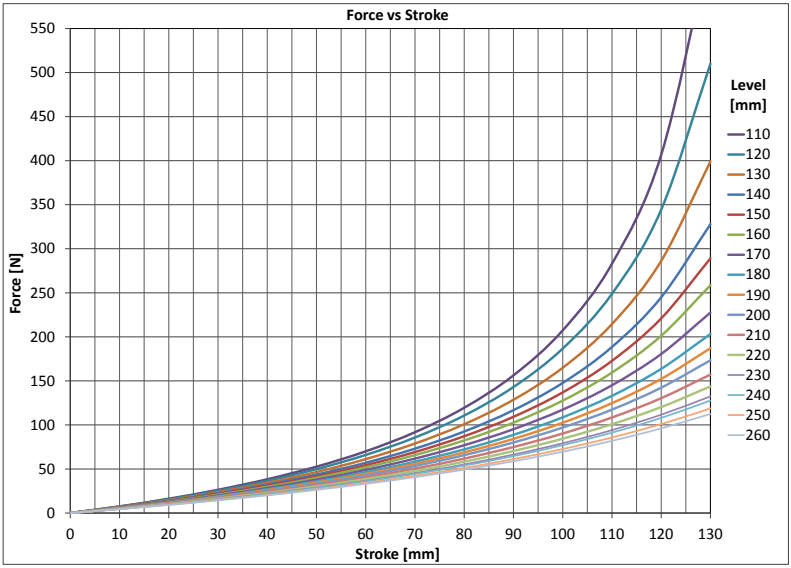

Öhlins products are subject to continuous improvement and development, therefore, although these instructions include the most up-to-date information available at the time of printing, minor updates may occur.

To find the latest information contact an Öhlins distributor. Please contact Öhlins if you have any questions regarding the contents in this document.

Part no. MI_21944_01_1
Issued 2019-10-18

© Öhlins Racing AB. All rights reserved. Any reprinting or unauthorized use without the written permission of Öhlins Racing AB is prohibited.

Öhlins Racing AB
Box 722
S-194 27 Upplands Väsby, Sweden
Phone +46 8 590 025 00
fax +46 8 590 025 80

ÖHLINS
ADVANCED SUSPENSION TECHNOLOGY

www.ohlins.com