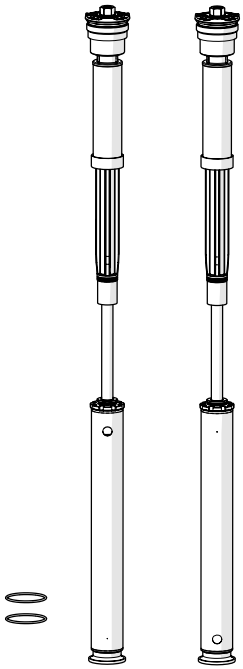

Kit Contents		
Description	**Part No**	**Pcs**
Cartridge kit	FGK 246	1
O-ring 40x2.5	00576-02	2
Sticker set Öhlins	-	-
Owner's manual	07284-01	1

Note!

Please note that there can be small differences between your product and the images in these instructions.

Note!

Please note that during storage and transport, especially at high ambient temperature, some of the oil and grease used for assembly may leak and stain the packaging. This will not cause damage to the product, wipe off the excessive oil or grease with a cloth.

Note!

Before you install this product, check the kit contents. If anything is missing, please contact an Öhlins dealer.

⚠ Warning!

Before you install this product, read the Öhlins Owner's manual. This product is an important part of the vehicle and the vehicle stability.

Cartridge kit for Suzuki GSX-8R

FGK 246

Mounting Instructions

ÖHLINS®
ADVANCED SUSPENSION TECHNOLOGY

MOUNTING INSTRUCTIONS

⚠ Warning!

We strongly recommend to let an Öhlins dealer install this product.

⚠ Warning!

If you work with a lifted vehicle, make sure that it is safely supported to prevent it from tipping over.

Note!

When you work with this product, see the vehicle service manual for vehicle specific procedures and important data.

Note!

Before you install this product clean the vehicle.

⚠ Warning!

Spring compression creates a potential danger because of the violent force that loaded springs are capable of. Beware of this when you work with the front fork.

Tool	Part no	Applies	Size
Vehicle service manual			
Torque wrench 10-60 Nm		Torque	
Heat gun		Soften thread locker	
Hex key		Compression and rebound adjuster	3 mm
Extended hex key		Cylinder tube assembly	17 mm
Socket		Main preload adjuster	14 mm
Wrench		Spring support	19 mm
Suspension fluid	01309-xx		
Grease	00146-01		100 g
Loctite 2400	01791-25		50 ml
Loctite 2700	01791-27		50 ml
Shaft extension tool	01765-03		
Seal head tool	01797-07		
Top cap tool	00797-08		
Clamp tool	24670-01	24669-01	
Sleeve	24669-01	Original inner tube	41 mm

1 Remove original front fork

Note!

The following procedure applies to both front fork legs.

1

Put the motorcycle on a workstand so that the front wheel barely touches the ground.

⚠ Warning!

Make sure the vehicle is securely supported so that it will not fall over.

2

Remove front fender, brake calipers, speed sensor (if present) and front wheel.

3

Release main spring preload fully (if present).

4

Note front fork leg position.

5

Loosen upper triple clamp.

6

Loosen (do not remove) top cap ½ turn.

7

Loosen lower triple clamp.

8

Remove front fork legs from triple clamps.

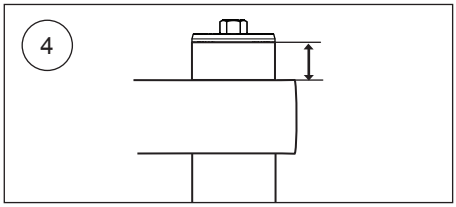

2 Disassemble original front fork

Note!

The following procedure applies to both front fork legs.

1

Remove top cap from outer tube.

2

Slide outer tube down until it stops.

3

Remove top cap from shaft according to instructions in the vehicle service manual.

4

Remove seal head from inner tube according to instructions in the vehicle service manual.

5

Remove main spring and associated parts according to instructions in the vehicle service manual.

6

Drain front fork leg from suspension fluid.

7

Remove outer tube from inner tube according to instructions in the vehicle service manual.

8

Remove inner tube lock screw.

⚠ Warning!

If lock screw is not removed inner tube and fork bottom will be damaged.

⚠ Warning!

Inner tube thread may need to be repaired before removing inner tube [apply appropriate method].

9

Install inner tube tool on inner tube. Do not place tool at sealing or gliding surface.

[24670-01 Clamp tool]

[24669-01 Sleeve 41]

10

Soften thread locker between inner tube and fork bottom with a heat gun.

[Heat gun]

11

Remove inner tube from fork bottom.

12

Remove o-ring and washer from fork bottom. Replace o-ring if worn or damaged.

[Part no according to the vehicle spare part list]

3 Install Öhlins cartridge kit

Note!

The following procedure applies to both front fork legs.

Caution!

The cartridge kit is divided into compression and rebound cartridges.
Install compression cartridge marked “COMP” in left hand side front fork leg.
Install rebound cartridge marked “REB” in right hand side front fork leg.

1

Remove top cap, spring support and preload tube.

2

Remove cylinder tube assembly from shaft assembly.

3

Remove adaptor ring from cylinder tube assembly.

4

Clean and degrease inner tube, fork bottom and adaptor ring.

5

Install adaptor ring in fork bottom.

Caution!

Make sure to install the adaptor correctly. See figure 5.

6

Install o-ring in fork bottom. Apply grease on o-ring.
[00146-01 grease]

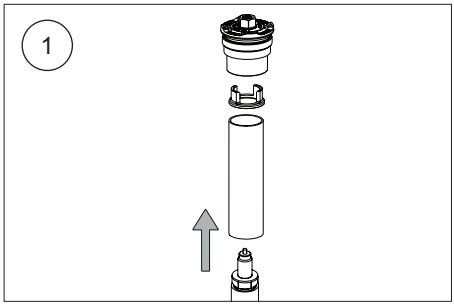

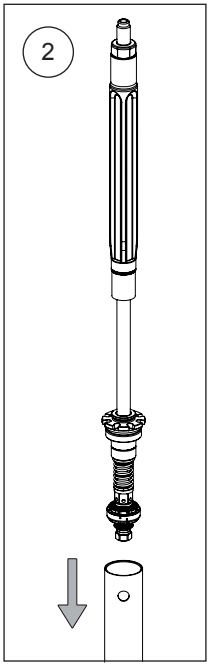

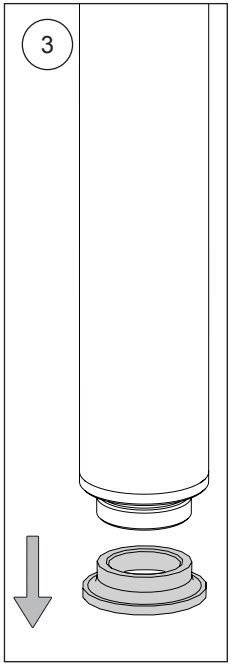

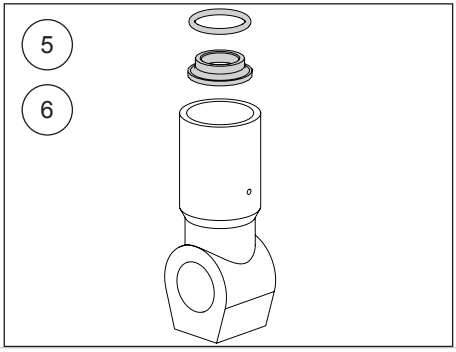

7

Install inner tube using inner tube tool. Apply Loctite 2700. Tighten to 130 Nm.

[24670-01 Clamp tool]

[24669-01 Sleeve 41]

[01791-27 Loctite 2700]

Note!

To get the correct torque, make sure to place the torque wrench in a 90 degree angle to the Fork tube tool.

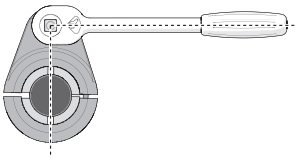

8

Install cylinder tube assembly in front fork leg with an extended hex key. Apply Loctite 2400 on adaptor thread. Tighten to 40 Nm.

[Extended hex key 17 mm]

[01791-25 Loctite 2400]

9

Install outer tube according to instructions in the vehicle service manual.

10

Pour approximately 0.5 litre Öhlins suspension fluid in front fork leg.

⚠ Warning!

Fluid level must be approximately 50 mm above top of cylinder tube assembly.

11

Apply grease on seal head thread. Insert the shaft assembly in fork leg. Tighten seal head to 20 Nm.

[00146-01 grease]

[01797-07 seal head tool]

12

Use a hex key to open compression and rebound bleed adjusters fully. Install top cap directly to shaft extension (no main spring or preload tube). Pull up outer tube and tighten it to the top cap with your hand.

[Hex key 3 mm]

13

Pull outer tube up and down 10-15 times to pump out all air from the cartridge.

14

Remove top cap from front fork leg.

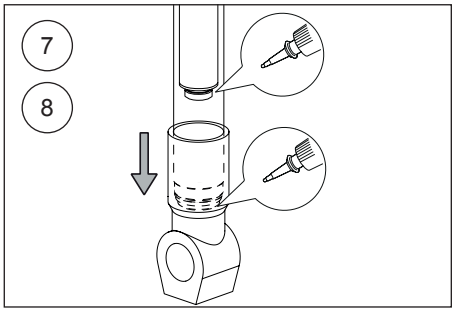

15

Make sure that shaft assembly and outer tube are in their bottom positions.
Set suspension fluid level according to chapter “Setup Data”.

16

Install tool on shaft extension.
Install main spring (A), preload tube (B) and spring support (C) over shaft extension tool. Select main spring according to chapter “Main spring guide”.
[01765-03 shaft extension tool]

17

Pull up shaft assembly and grab spring support with a wrench.
[Wrench 19 mm]

18

Remove shaft extension tool.

19

Make sure that compression and rebound adjusters are fully open before installing top cap. Use a hex key to open compression and rebound adjusters.
[Hex key 3 mm]

20

Install o-ring on top cap. Apply grease on o-ring and thread.
[00576-02 o-ring]
[00146-01 grease]

21

Install top cap on shaft extension. Tighten to 15 Nm.
[Socket 14 mm]

22

Remove wrench from spring support.

23

Pull up outer tube. Make sure front fork leg is in a fully extended position. Use top cap tool to tighten top cap to outer tube. Tighten to 10 Nm.
[00797-08 top cap tool]

24

Set compression, rebound and main spring adjusters according to chapter “Setup Data”. Use a hex key for compression and rebound adjusters. Use a socket for main spring preload adjuster.
[Hex key 3 mm]
[Socket 14 mm]

25

Install front fork legs in vehicle at recommended front fork leg position, according to chapter “Setup data”.

26

Remaining installation, instructions according to vehicle service manual.

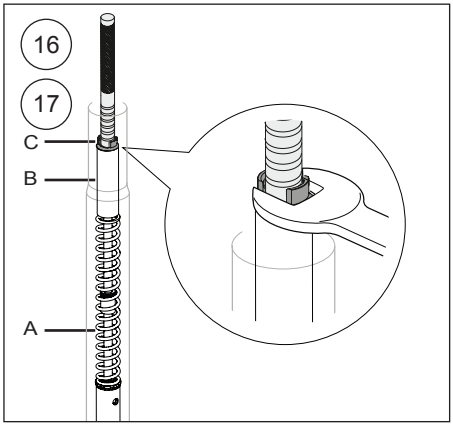

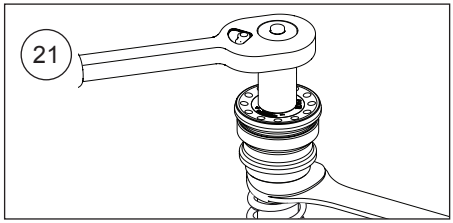

SETUP DATA

Recommended setup

Compression adjustment	12	clicks
Rebound adjustment	12	clicks
Suspension fluid level	155	mm
Minimum suspension fluid level	290	mm
Suspension fluid part number	01309-xx	
Front fork leg position	Standard	

MAIN SPRING GUIDE

Make sure you choose the correct main spring for your rider weight, driving style and preferences. Below you find a general recommendation of main spring rate for your weight. Contact an authorized Öhlins service center for advice.

Rider weight [kg]	50	60	70	80	90	100	110
Spring rate [N/mm]	9	9.5	9.5	10	10	10,5	10,5
Preload [turns]	5	4	6	5	7	7	8
Part number (pair)	08423-90	08423-95	08423-95	08423-10	08423-10	08423-05	08423-05

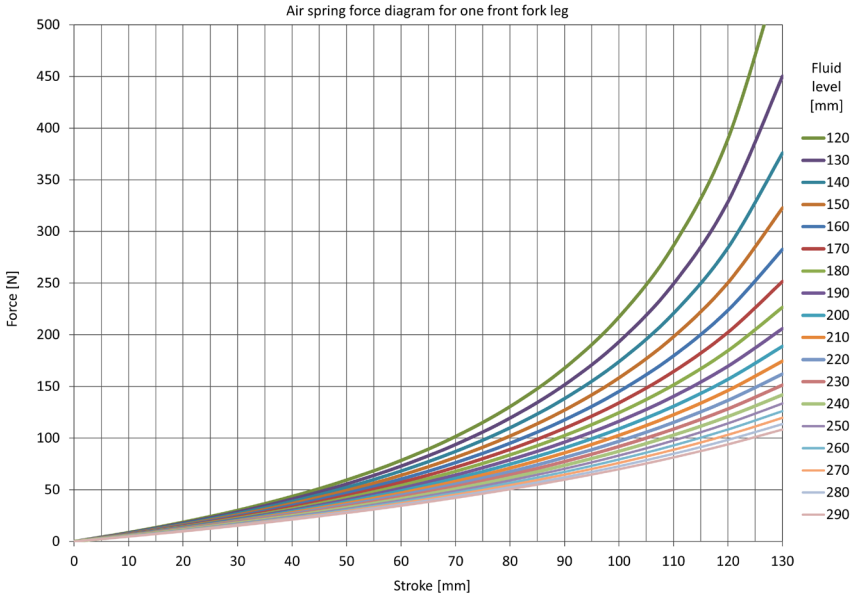

Öhlins products are subject to continuous improvement and development, therefore, although these instructions include the most up-to-date information available at the time of printing, minor updates may occur.

To find the latest information contact an Öhlins distributor. Please contact Öhlins if you have any questions regarding the contents in this document.

Part no. MI_FGK246_0
Issued 2025-04-10

© Öhlins Racing AB. All rights reserved. Any reprinting or unauthorized use without the written permission of Öhlins Racing AB is prohibited.

Öhlins Racing AB
Box 722
S-194 27 Upplands Väsby, Sweden
Phone +46 8 590 025 00
fax +46 8 590 025 80

ÖHLINS
ADVANCED SUSPENSION TECHNOLOGY

www.ohlins.com