FITTING INSTRUCTIONS FOR CP0571 CRASH PROTECTORS



THIS KIT CONTAINS THE ITEMS PICTURED AND LABELLED OVER PAGE.

SOME PARTS MAY BE SHOWN FOR CLARITY OF INSTRUCTIONS ONLY.

DO NOT PROCEED UNTIL YOU ARE SURE ALL PARTS ARE PRESENT.

PLEASE READ ALL INSTRUCTIONS BEFORE PROCEEDING.

IF IN ANY DOUBT WHEN FITTING OUR PRODUCTS, CONSULT ONE OF OUR DEALERS OR HAVE FITTED BY A QUALIFIED TECHNICIAN.

PLEASE NOTE THAT THE WAY THE KIT IS PACKED DOES NOT NECESSARILY REPRESENT THE WAY OF MOUNTING TO THE BIKE.

IN THE EVENT OF RUBBER WASHERS BEING USED TO HOLD COMPONENTS ONTO BOLTS, THESE RUBBER WASHERS CAN BE THROWN AWAY.

DIGITAL COPIES OF THESE INSTRUCTIONS ARE AVAILABLE FROM:

WWW.RG-RACING.COM

R&G Racing
Unit 1, Shelley's Lane, East Worldham, Alton, Hampshire, GU34 3AQ
Tel: +44 (0)1420 89007 Fax: +44 (0)1420 87301 www.rg-racing.com Email: info@rg-racing.com

TOOLS REQUIRED	**GENERAL TORQUE SETTINGS**
• Socket set • Ratchet • Torque wrench (up to 50Nm).	M4 BOLT = 8Nm M5 BOLT = 12Nm M6 BOLT = 15Nm M8 BOLT = 20Nm M10 BOLT = 40Nm M12 BOLT = 40Nm

LEGEND

ITEM NO.	DESCRIPTION	QTY
ITEM 1	MOUNTING BLOCK	2
ITEM 2	BOBBIN SPACER	2
ITEM 3	BOBBIN	2
ITEM 4	BOLT SPACER	2
ITEM 5	SHAKE PROOF WASHER	2
ITEM 6	M12 WASHER	2
ITEM 7	M12 x 100mm BOLT	2
ITEM 8	M8 x 40mm BOLT	2
ITEM 9	M8 x 45mm BOLT	2
ITEM 10	BOBBIN CAP	2
ITEM 11	NUT CAPS (NOT SHOWN)	4

AERO STYLE CRASH-PROTECTOR ORIENTATION



FRONT OF BIKE **REAR OF BIKE**

R&G Racing
Unit 1, Shelley's Lane, East Worldham, Alton, Hampshire, GU34 3AQ
Tel: +44 (0)1420 89007 Fax: +44 (0)1420 87301 www.rg-racing.com Email: info@rg-racing.com

EXPLODED ASSEMBLY VIEW

LHS

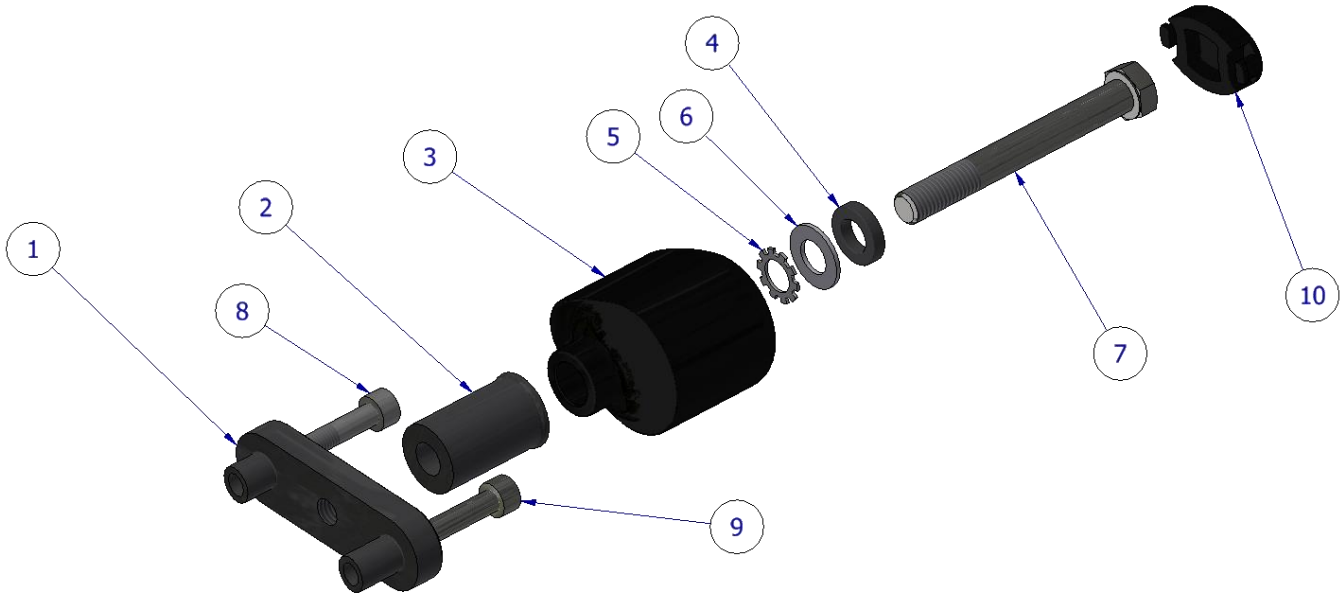

RHS

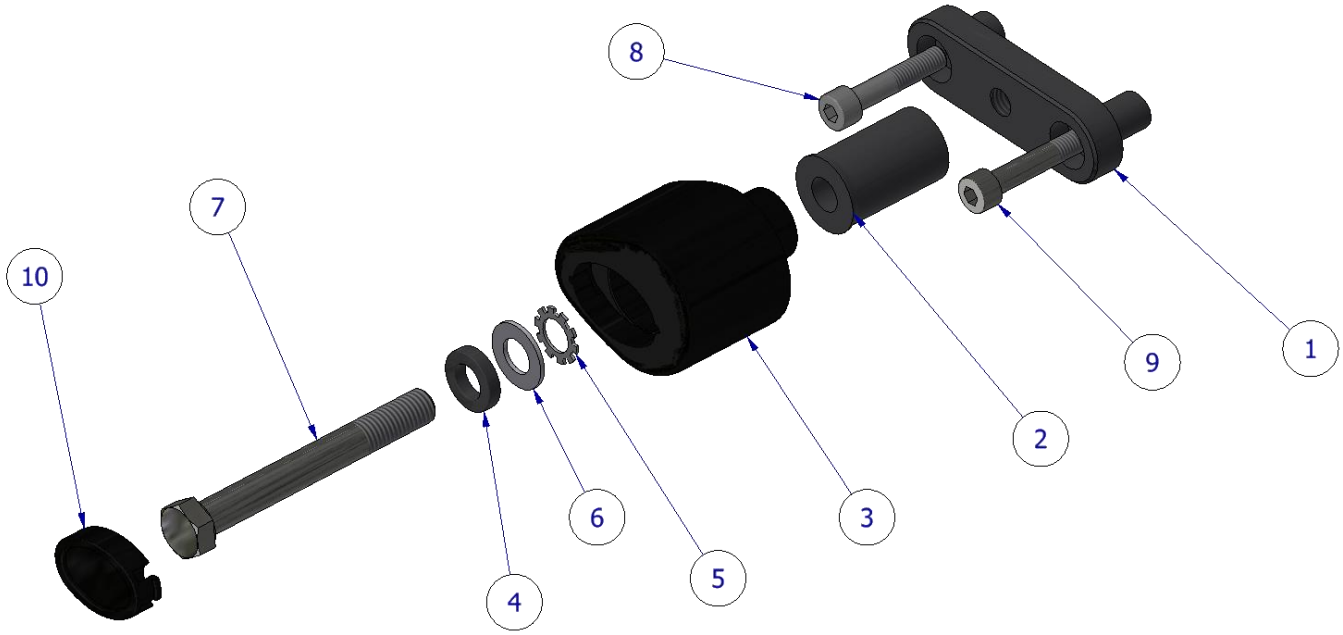

R&G Racing
Unit 1, Shelley's Lane, East Worldham, Alton, Hampshire, GU34 3AQ
Tel: +44 (0)1420 89007 Fax: +44 (0)1420 87301 www.rg-racing.com Email: info@rg-racing.com

FITTING PICTURE

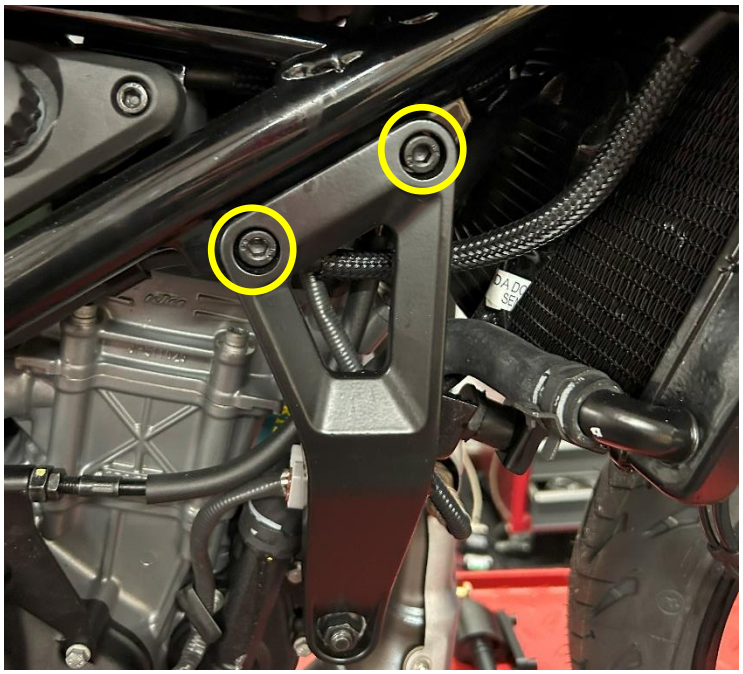

FITTING INSTRUCTIONS

Before removing engine bolts, ensure the bike is upright and supported by a suitable engine stand or jack placed under the sump of the motorbike to support the partial weight of the engine, this will prevent the engine from moving during fitting. DO NOT REMOVE MORE THAN 1 ENGINE BOLT AT ANY TIME.

1. Remove the bottom bolt circled in the **Fitting Picture** (this is the same on both sides of the bike) and thread the shorter M8 bolt **(Item 8)** through the SHOTER SIDE of the mounting block **(Item 1)** and frame approx. 40% of the way (do not fully tighten).
2. Now remove the top bolt circled in the Fitting Picture and thread the longer M8 bolt **(Item 9)** through the mounting block & frame. Fully tighten both bolts to the spec shown in the general torque settings table.
3. Assemble the crash protector kit **(Items 1-7)** as shown in the **EXPLODED ASSEMBLY VIEW** for both RHS & LHS.
4. Finally tighten the M12 x 100mm bolt **(Item 7)** until you feel some compression. Using our GENERAL TORQUE SETTINGS on PAGE 2 tighten the bolts to the correct torque. **PLEASE NOTE THE CRASH PROTECTOR MUST BE POSITIONED AS SHOWN IN THE PICTURES WITH BIGGER END TOWARD FRONT OF BIKE.**
5. If not already fitted, fit bubble sticker into recess of bobbin cap **(ITEM 10).**
6. Fit crash protector cap **(ITEM 10)** into the crash protector **(ITEM 3)**, and nut caps **(Item 11)** into the exposed caps of the bolts **(items 8 & 9).**

REPEAT THE ABOVE STEPS FOR BOTH SIDES OF THE MOTORCYLCE.

R&G Racing
Unit 1, Shelley's Lane, East Worldham, Alton, Hampshire, GU34 3AQ
Tel: +44 (0)1420 89007 Fax: +44 (0)1420 87301 www.rg-racing.com Email: info@rg-racing.com

CONSUMER NOTICE

The catalogue description and any exhibition of samples are only broad indications of the Products and R&G may make design changes which do not diminish their performance or visual appeal and supplying them in such state shall conform to the order. The Buyer acknowledges no representation or warranty (other than as to title) has been given or will apply to the Products other than those in R&G's order or confirmation and the Buyer confirms it has chosen the Products as being of merchantable quality and suitable for its particular purposes. Where R&G fits the Products or undertakes other services it shall exercise reasonable skill and care and rectify any fault free of charge unless the workmanship has been disturbed. The Buyer is responsible for ensuring that the warranty on the motorcycle is not affected by the fitting of the Products. On return of any defective Products R&G shall at its option either supply a replacement or refund the purchase money but shall not be liable if the Products have been modified or used or maintained otherwise than in accordance with R&G's or manufacturer's instructions and good engineering practice or if the defect arises from accident or neglect. Other than identified above and subject to R&G not limiting its liability for causing death and personal injury, it shall not be liable for indirect or consequential loss and otherwise its liability shall be limited to the amounts paid by the Buyer for the Products or the fitting or service concerned. These terms do not affect the Buyer's statutory rights.

R&G RACING RETURNS POLICY (NON-FAULTY GOODS)

Returns must be pre-authorised (if not pre-authorised the return will be rejected). Goods may only be returned direct to us if they were purchased direct from us (customer must prove if necessary). Otherwise to be returned to original vendor. Goods must be in re-sellable condition, in the opinion of R&G Racing. All returns are subject to a 25% restocking and handling fee (25% of the gross value exc. P&P – at the prevailing price at time of purchase). The customer must pay any and all carriage charges. No returns of discontinued products, unless within 14 days of purchase. This policy does not affect your statutory rights and does not refer to faulty goods.

R&G Racing
Unit 1, Shelley's Lane, East Worldham, Alton, Hampshire, GU34 3AQ
Tel: +44 (0)1420 89007 Fax: +44 (0)1420 87301 www.rg-racing.com Email: info@rg-racing.com