FITTING INSTRUCTIONS FOR LP0208BK LICENCE PLATE BRACKET YAMAHA TRACER 700 '16-



THIS KIT CONTAINS THE ITEMS PICTURED AND LABELLED BELOW.
DO NOT PROCEED UNTIL YOU ARE SURE ALL PARTS ARE PRESENT.

Please note that the way the kit is packed does not necessarily represent the way of mounting to the bike.

THE PARTS SHOWN MAY BE REPRESENTATIVE ONLY (FOR CLARITY OF INSTRUCTIONS ONLY).

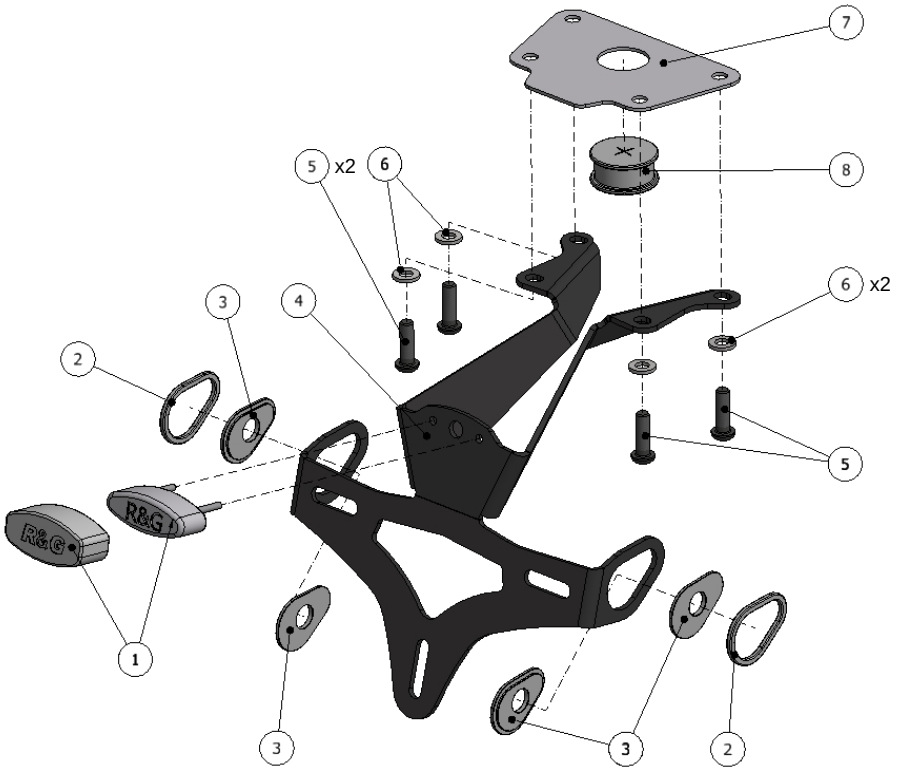

R&G Racing
Unit 1, Shelley's Lane, East Worldham, Alton, Hampshire, GU34 3AQ
Tel: +44 (0)1420 89007 Fax: +44 (0)1420 87301 www.rg-racing.com Email: info@rg-racing.com

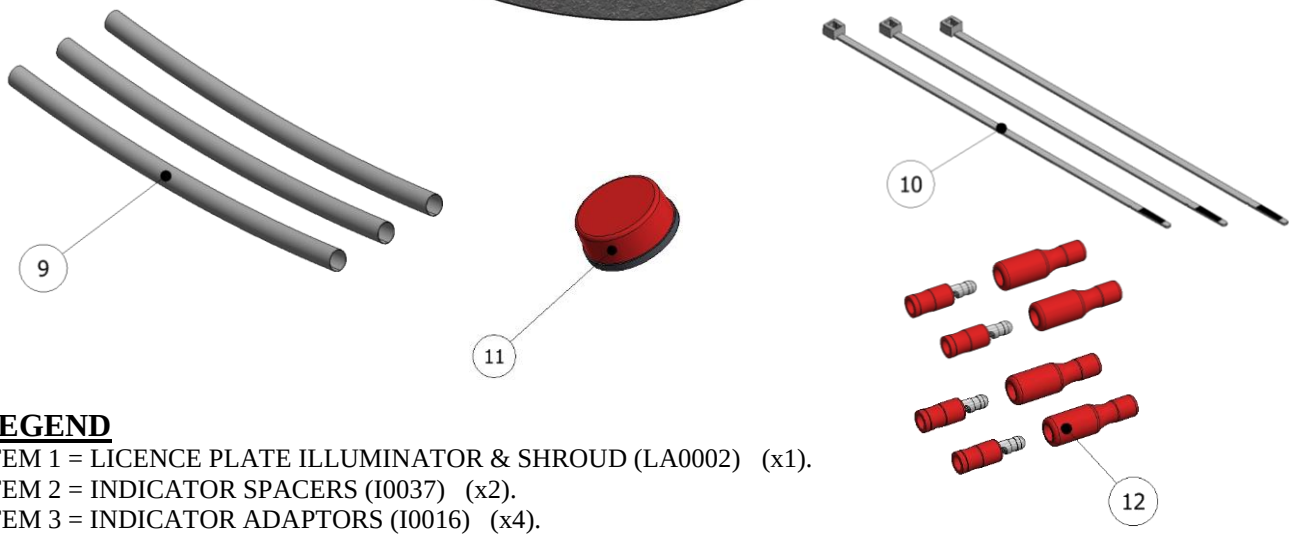

LEGEND

ITEM 1 = LICENCE PLATE ILLUMINATOR & SHROUD (LA0002) (x1).
ITEM 2 = INDICATOR SPACERS (I0037) (x2).
ITEM 3 = INDICATOR ADAPTORS (I0016) (x4).
ITEM 4 = LICENCE PLATE BRACKET (TB0178) (x1).
ITEM 5 = M6 x 20mm LONG BUTTON HEAD BOLTS (x4).
ITEM 6 = M6 WASHERS (x4).
ITEM 7 = COVER PLATE (TB0208 COVER) (x1).
ITEM 8 = RUBBER BUNG (RB0004) (x1).
ITEM 9 = 150mm LENGTH OF HEATSHRINK (x3).
ITEM 10= 2.5mm CABLE TIES (x3).
ITEM 11 = REFLECTOR (x1).
ITEM 12 = BULLET CONNECTORS (CON0004) (x2).

Please note that in cases where kits are packed with rubber washers holding the components onto the bolt – *the rubber washers should be thrown away*!

TOOLS REQUIRED

- Set of metric Allen keys to include 4, 5mm A/F size.
- 6 & 13mm spanners or sockets.
- Cable cutters.

MAXIMUM TORQUE SETTINGS

- M4 Bolt = 8 Nm
- M5 Bolt = 12 Nm
- M6 Bolt = 15 Nm
- M8 Bolt = 20 Nm

R&G Racing
Unit 1, Shelley's Lane, East Worldham, Alton, Hampshire, GU34 3AQ
Tel: +44 (0)1420 89007 Fax: +44 (0)1420 87301 www.rg-racing.com Email: info@rg-racing.com

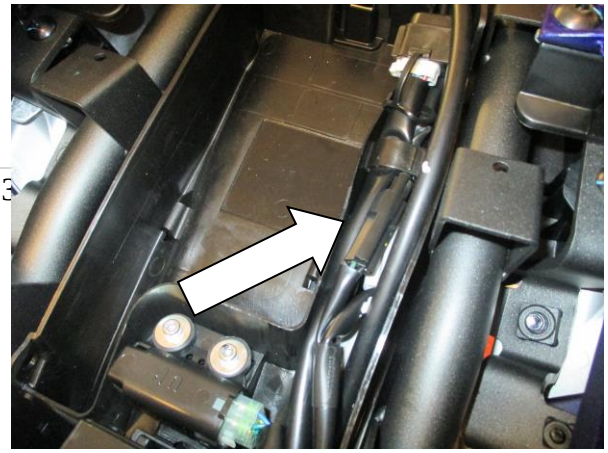

Picture 1



Picture 2



Picture 3



Picture 4



Picture 5



Picture 6

R&G Racing
Unit 1, Shelley's Lane, East Worldham, Alton, Hampshire, GU34 3AQ
Tel: +44 (0)1420 89007 Fax: +44 (0)1420 87301 www.rg-racing.com Email: info@rg-racing.com



Picture 7



Picture 8



Picture 9



Picture 10



Picture 11



Picture 12

R&G Racing
Unit 1, Shelley's Lane, East Worldham, Alton, Hampshire, GU34 3AQ
Tel: +44 (0)1420 89007 Fax: +44 (0)1420 87301 www.rg-racing.com Email: info@rg-racing.com



Picture 13



Picture 14



Picture 15



Picture 16

FITTING INSTRUCTIONS

- To fit the R&G tail tidy, remove the seat using the key and disconnect the three licence plate illuminator/indicator connectors that are arrowed in picture 1 and shown in picture 2.
- Remove the clip and cut the cable tie that bundle the wiring together.
- Remove the four bolts that mount the underside of the OEM licence plate bracket to the bike, as shown in picture 3 and gently remove from the bike, feeding the wiring out in the process.
- Take the licence plate bracket (item 4 – TB0178) and fit the R&G tail light (item 1 – LA0002) to the bracket, as shown in pictures 4 & 5. Fit one length of heatshrink to the wires, tighten the nuts on the rear and use a small amount of super glue to secure the light shroud in place, as shown in picture 5.
- Take the cover plate (item 7 – TB0208 Cover) and fit the rubber bung (item 8 – RB0004) through the large hole from either side, as shown in picture 6.
- Offer the two assemblies together, with the cover plate positioned on top of the four mounting holes of the licence plate bracket and fit the four M6 x 25mm long button head bolts (item 5) and four M6 washers (item 6)

through the licence plate bracket and then through the cover plate, as shown in picture 7. Ensure the rubber bung is positioned so the internal recess faces downwards when mounted on the bike.

- Take this assembly and offer up to the underside of the bike, tightening the four bolts into the threaded bosses inside the tail unit, as shown in picture 8.

If fitting Mini Indicators

- To fit the R&G Mini Indicators, fit one length of heatshrink to the wires of each indicator.
- Position two indicator adaptors (item 3 –I0037) onto the wiring of each indicator, ensuring the sides facing each other have the raised centre profile.
- Fit either indicator through the large slot on the side of the tail tidy, locating the indicator adaptors either side of the metal bracket, before fitting the nut onto the exposed thread and tightening, as shown in pictures 9 & 10.

If fitting OEM Indicators

- Remove the plastic cover from the OEM licence plate bracket by gently spreading the rear to release the clips and then the front will dismount and the cover can be removed, as shown in picture 11.
- To remove the OEM indicator, remove the plastic mounting plate from the rubber housing, as shown in picture 12, before removing the rubber mount from the licence plate bracket, as shown in picture 13. Feed the wiring out to remove.
- Fit one indicator spacer (item 2 – I0016) to both rubber indicator mounts, before fitting into the large slot on either side of the tail tidy as shown in pictures 14 & 15. Secure in place by reusing the plastic mounting plate in the same way that is was removed.

- Feed the licence plate illuminator and indicator wiring up through the rubber bung into the tail unit and use the cable ties provided (item 10) to neatly bundle the wires together, as shown in picture 16.
- In order to connect the wiring to the licence plate illuminator & mini indicators, the wiring needs to be "cut & shut". To do this, cut the connector and at least 50mm of wiring off the OEM licence plate illuminator and fit the bullet connectors that are supplied with the LA0002 to the exposed end of both wires. Connect these to the LA0002 bullet connectors and then re-connect the connector block to the black connector on the OEM loom *(if illumination fails, reverse the bullet connectors).*
- If re-fitting the OEM indicators, re-connect the connectors on the indicator wiring to the matching connector on the OEM loom.
- If fitting mini indicators, cut the connector and at least 50mm of wiring off both the OEM indicators and fit the female bullet connectors (item 12 – CON0004) to the exposed end of both wires on both indicators. Connect these to the bullet connectors on the indicators and then re-connect the connector block to the remaining two connectors on the OEM loom *(if illumination fails, reverse the bullet connectors).*
- Check for the correct operation of all lights.
- Re-fit the wiring clip and neatly route the wiring with the tail unit.
- Ensure the tail tidy is securely mounted and all bolts are fully tightened.
- Re-fit the seat.
- Re-fit the licence plate (it may require drilling).
- Depending on local laws, attach enclosed reflector in an appropriate location.
- Test the licence plate illuminator and all lights before riding.

ISSUE 1 22/07/2016 (AR)

Digital copies of these instructions are available to download from www.rg-racing.com

R&G Racing
Unit 1, Shelley's Lane, East Worldham, Alton, Hampshire, GU34 3AQ
Tel: +44 (0)1420 89007 Fax: +44 (0)1420 87301 www.rg-racing.com Email: info@rg-racing.com

CONSUMER NOTICE

The catalogue description and any exhibition of samples are only broad indications of the Products and R&G may make design changes which do not diminish their performance or visual appeal and supplying them in such state shall conform to the order. The Buyer acknowledges no representation or warranty (other than as to title) has been given or will apply to the Products other than those in R&G's order or confirmation and the Buyer confirms it has chosen the Products as being of merchantable quality and suitable for its particular purposes. Where R&G fits the Products or undertakes other services it shall exercise reasonable skill and care and rectify any fault free of charge unless the workmanship has been disturbed. The Buyer is responsible for ensuring that the warranty on the motorcycle is not affected by the fitting of the Products. On return of any defective Products R&G shall at its option either supply a replacement or refund the purchase money but shall not be liable if the Products have been modified or used or maintained otherwise than in accordance with R&G's or manufacturer's instructions and good engineering practice or if the defect arises from accident or neglect. Other than identified above and subject to R&G not limiting its liability for causing death and personal injury, it shall not be liable for indirect or consequential loss and otherwise its liability shall be limited to the amounts paid by the Buyer for the Products or the fitting or service concerned. These terms do not affect the Buyer's statutory rights.

R&G RACING RETURNS POLICY (NON-FAULTY GOODS)

Returns must be pre-authorised (if not pre-authorised the return will be rejected). Goods may only be returned direct to us if they were purchased direct from us (customer must prove if necessary). Otherwise to be returned to original vendor. Goods must be in re-sellable condition, in the opinion of R&G Racing. All returns are subject to a 25% restocking and handling fee (25% of the gross value exc. P&P – at the prevailing price at time of purchase). The customer must pay any and all carriage charges. No returns of discontinued products, unless within 14 days of purchase. This policy does not affect your statutory rights and does not refer to faulty goods.

NOTICE DE MONTAGE POUR <u>LP0208BK</u> SUPPORT DE PLAQUE
<u>YAMAHA TRACER 700 ’16-</u>



<u>Le kit contient les articles exposés ci-dessous, vérifier que toutes les pièces soient présentes avant de procéder au montage.</u>

<u>LA FAÇON DONT LE KIT EST EMBALLE NE CORRESPOND PAS FORCEMENT A LA FAÇON DE MONTER LES PIECES SUR LA MOTO.</u>

LES PARTIES PRESENTEES PEUVENT ETRE UNIQUEMENT REPRESENTATIVES (POUR LA CLARTE DES INSTRUCTIONS UNIQUEMENT).

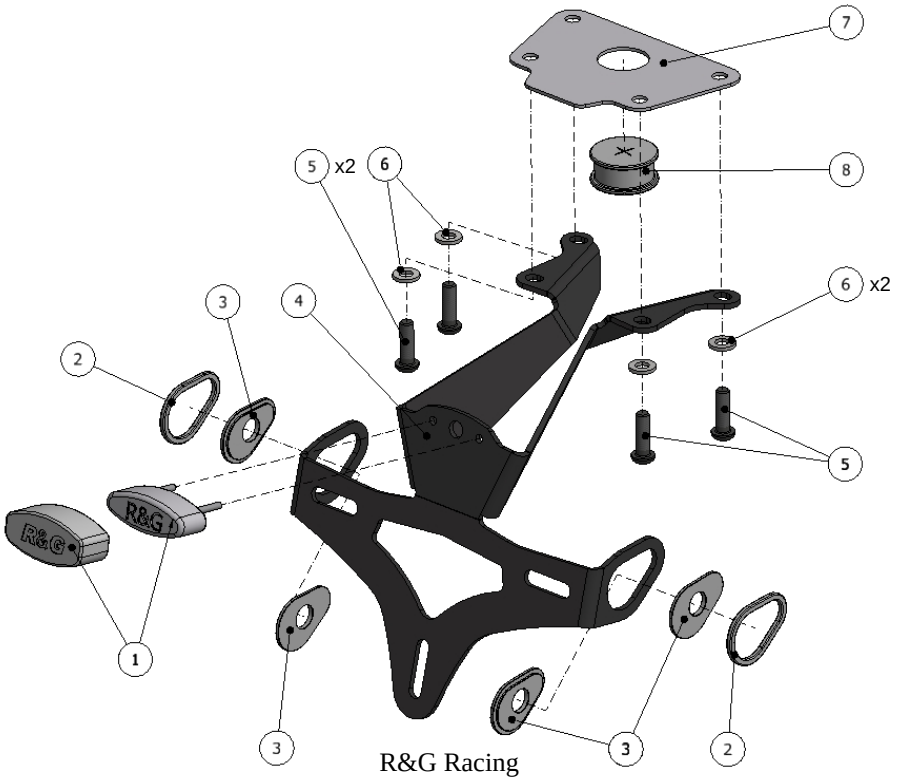

R&G Racing
Unit 1, Shelley’s Lane, East Worldham, Alton, Hampshire, GU34 3AQ
Tel: +44 (0)1420 89007 Fax: +44 (0)1420 87301 www.rg-racing.com Email: info@rg-racing.com

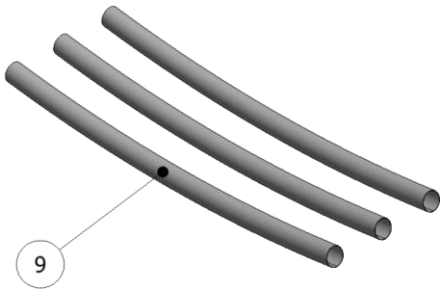

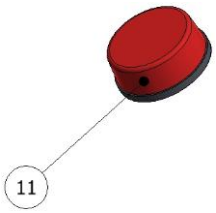

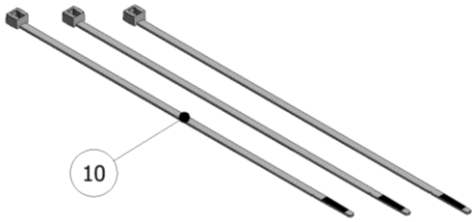

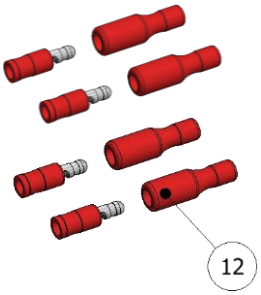

LEGENDE

ARTICLE 1 = FEU DE PLAQUE & LINCEUL (LA0002) (x1).
ARTICLE 2 = ENTRETOISES DE CLIGNOTANT (I0037) (x2).
ARTICLE 3 = ADAPTATEURS CLIGNOTANTS (I0016) (x4).
ARTICLE 4 = SUPPORT DE PLAQUE (TB0178) (x1).
ARTICLE 5 = M6 x 20mm BOULONS (x4).
ARTICLE 6 = M6 RONDELLES (x4).
ARTICLE 7 = PLAQUE DE COUVERTURE (TB0208 CACHE) (x1).
ARTICLE 8 = GARNITURE EN CAOUTCHOUC (RB0004) (x1).
ARTICLE 9 = 150mm BANDEAU THERMO RETRACTABLE (x3).
ARTICLE 10= 2.5mm COLLIERS DE SERRAGE (x3).
ARTICLE 11 = REFLECTEUR (x1).
ARTICLE 12 = CONNECTEURS (CON0004) (x2).

Notez que si les kits sont emballés avec des rondelles en caoutchouc servant à tenir les composants, *ces rondelles doivent être jetées*!

OUTILS REQUIS

- Clés Allen 4 et 5mm.
- Clés à douille 6 & 13mm.
- Pince coupante.

Couples de serrage recommandés :

M4 BOULON = 8Nm
M5 BOULON = 12Nm
M6 BOULON = 15Nm
M8 BOULON = 20Nm

R&G Racing
Unit 1, Shelley's Lane, East Worldham, Alton, Hampshire, GU34 3AQ
Tel: +44 (0)1420 89007 Fax: +44 (0)1420 87301 www.rg-racing.com Email: info@rg-racing.com

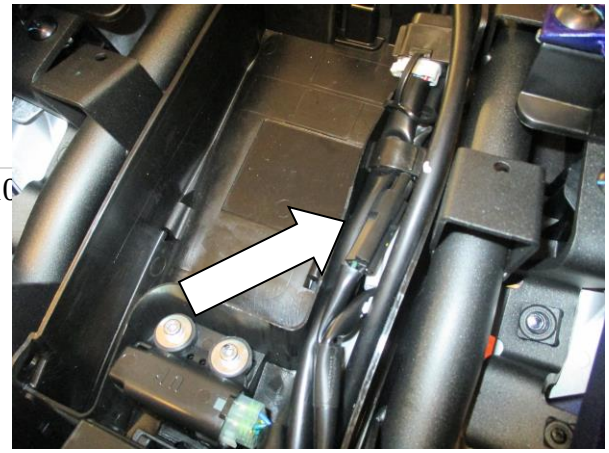

Photo 1



Photo 2



Photo 3



Photo 4



Photo 5



Photo 6

R&G Racing
Unit 1, Shelley's Lane, East Worldham, Alton, Hampshire, GU34 3AQ
Tel: +44 (0)1420 89007 Fax: +44 (0)1420 87301 www.rg-racing.com Email: info@rg-racing.com



Photo 7



Photo 8



Photo 9



Photo 10



Photo 11



Photo 12

R&G Racing
Unit 1, Shelley's Lane, East Worldham, Alton, Hampshire, GU34 3AQ
Tel: +44 (0)1420 89007 Fax: +44 (0)1420 87301 www.rg-racing.com Email: info@rg-racing.com



Photo 13



Photo 14



Photo 15



Photo 16

NOTICE DE MONTAGE

- Enlever le siège à l'aide de la clé et déconnecter les 3 connecteurs de feu de plaque/clignotants indiqués sur la photo 1 et photo 2.
- Enlever le clip et couper le collier de serrage qui groupe les fils ensemble.
- Enlever les 4 boulons qui fixent le dessous du support de plaque d'origine sur la moto, voir photo 3 puis enlevez-le doucement de la moto, tout en passant les fils vers l'extérieur.
- Prendre le support de plaque (article 4 – TB0178) et monter le feu de plaque R&G (article 1 – LA0002) sur le support, voir photos 4 & 5. Appliquer une longueur de manchon thermo rétractable sur les fils, serrer les écrous à l'arrière puis utiliser un peu de superglue pour fixer le linceul de feu en place, voir photo 5.
- Prendre la plaque de couverture (article 7 – TB0208 Cache) et appliquez les garnitures de caoutchouc (article 8 – RB0004) dans le trou le plus large de chaque coté, voir photo 6.
- Montez les assemblages ensemble, avec la plaque de couverture positionnée sur le dessus des 4 trous de fixation du support de plaque puis insérer les 4 boulons M6 x 25mm (article 5) et 4 rondelles M6 (article 6) dans le

support de plaque puis dans la plaque de couverture, voir photo 7. Veiller à ce que la garniture de caoutchouc soit positionnée de façon à ce que le creux interne soit orienté vers le bas lors du montage sur la moto.

- Monter l'assemblage au dessous de la moto, en serrant les 4 boulons dans les trous filetés de l'unité de support de plaque, voir photo 8.

Si vous montez des mini clignotants

- Pour monter les minis clignotants R&G, appliquer une manchon thermo rétractable sur les fils de chaque clignotant.
- Positionner les 2 adaptateurs de clignotants (article 3 –I0037) sur les fils de chaque clignotant, en veillant à ce que les cotés qui se font face aient le profil central surélevé.
- Monter chaque clignotant à travers chaque fente large sur le bord du support de plaque, en plaçant les adaptateurs de clignotants de chaque coté du support métal, avant d'insérer l'écrou sur le filetage exposé puis serrer, voir photos 9 & 10.

Si vous montez les clignotants d'origine

- Enlever le cache plastic du support de plaque d'origine en écartant légèrement l'arrière pour permettre de libérer les clips puis l'avant se démontera et le cache peut être enlevé, voir photo 11.
- Pour enlever le clignotant d'origine, enlever la plaque de fixation en plastic du boitier en caoutchouc, voir photo 12, avant d'enlever le support caoutchouc du support de plaque, voir photo 13. Passer les fils lors du démontage.
- Insérer une entretoise de clignotant (article 2 – I0016) sur les 2 supports de clignotants en caoutchouc, avant de l'insérer dans la large fente d'un coté du support de plaque, voir photos 14 & 15. Fixer en place en réutilisant la plaque de fixation plastique de la même façon qu'elle a été enlevée.

- Passer les fils de feu de plaque et le fil de clignotant à travers la garniture de caoutchouc dans l'unité de support de plaque puis utiliser les colliers de serrage fournis (article 10) pour organiser les fils ensemble, voir photo 16.
- Pour connecter les fils au feu de plaque & mini clignotants, le fil doit être coupé puis fermé. Pour cela, couper le connecteur au minimum 50mm de fils du feu de plaque d'origine puis montez les connecteurs fournis avec le LA0002 sur l'extrémité des 2 fils. Connectez les aux connecteurs LA0002 puis reconnecter le bloc de connecteur sur le faisceau d'origine (Si l'éclairage échoue, inverser les connecteurs*)*.
- Si vous remontez les clignotants d'origine, reconnecter les connecteurs sur le fil de clignotant au connecteur correspondant sur le faisceau d'origine.
- Si vous montez les mini clignotants, couper le connecteur et au minimum 50mm de fils des 2 clignotants d'origine puis montez les connecteurs femelle (article 12 – CON0004) sur l'extrémité des 2 fils des 2 clignotants. Connectez les aux connecteurs des clignotants puis reconnecter le bloc de connecteur aux 2 connecteurs restants sur le faisceau d'origine *(*Si l'éclairage échoue, inverser les connecteurs*)*.
- **Vérifiez que les clignotants et les feux de plaque fonctionnent correctement**.
- Remonter le clip de fils et organiser les fils au sein de l'unité de support de plaque.
- Vérifier que le support de plaque soit correctement monté et que tous les boulons soient complètement serrés.
- Remonter le siège.
- Remontez la plaque d'immatriculation (Peut nécessiter un perçage).
- Selon les lois locales, attacher les réflecteurs aux endroits appropriés.
- Testez le feu de plaque d'immatriculation et tous les autres feux avant de prendre la route.

ISSUE 1 22/07/2016 (AR)

Notice disponible sur www.rg-racing.com

R&G Racing
Unit 1, Shelley's Lane, East Worldham, Alton, Hampshire, GU34 3AQ
Tel: +44 (0)1420 89007 Fax: +44 (0)1420 87301 www.rg-racing.com Email: info@rg-racing.com

CONSUMER NOTICE

The catalogue description and any exhibition of samples are only broad indications of the Products and R&G may make design changes which do not diminish their performance or visual appeal and supplying them in such state shall conform to the order. The Buyer acknowledges no representation or warranty (other than as to title) has been given or will apply to the Products other than those in R&G's order or confirmation and the Buyer confirms it has chosen the Products as being of merchantable quality and suitable for its particular purposes. Where R&G fits the Products or undertakes other services it shall exercise reasonable skill and care and rectify any fault free of charge unless the workmanship has been disturbed. The Buyer is responsible for ensuring that the warranty on the motorcycle is not affected by the fitting of the Products. On return of any defective Products R&G shall at its option either supply a replacement or refund the purchase money but shall not be liable if the Products have been modified or used or maintained otherwise than in accordance with R&G's or manufacturer's instructions and good engineering practice or if the defect arises from accident or neglect. Other than identified above and subject to R&G not limiting its liability for causing death and personal injury, it shall not be liable for indirect or consequential loss and otherwise its liability shall be limited to the amounts paid by the Buyer for the Products or the fitting or service concerned. These terms do not affect the Buyer's statutory rights.

R&G RACING RETURNS POLICY (NON-FAULTY GOODS)

Returns must be pre-authorised (if not pre-authorised the return will be rejected). Goods may only be returned direct to us if they were purchased direct from us (customer must prove if necessary). Otherwise to be returned to original vendor. Goods must be in re-sellable condition, in the opinion of R&G Racing. All returns are subject to a 25% restocking and handling fee (25% of the gross value exc. P&P – at the prevailing price at time of purchase). The customer must pay any and all carriage charges. No returns of discontinued products, unless within 14 days of purchase. This policy does not affect your statutory rights and does not refer to faulty goods.